A		5X
B		8X
C	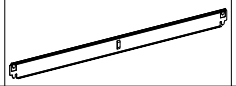	10X
D		10X
E		5X
F		4X
G		8X
H	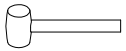	1X
I		2X

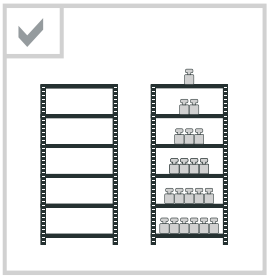

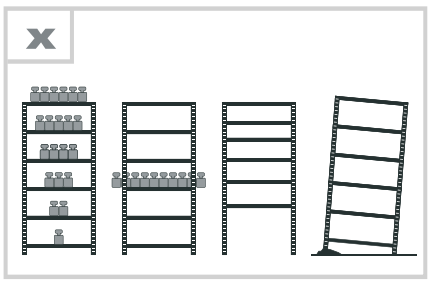

1

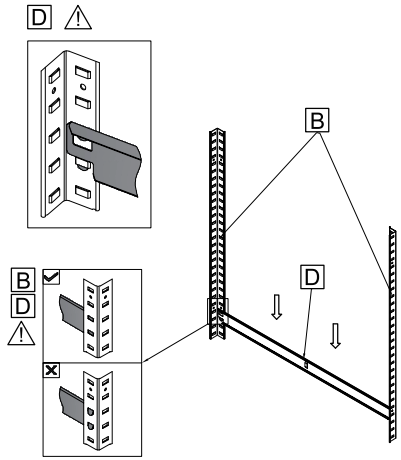

2

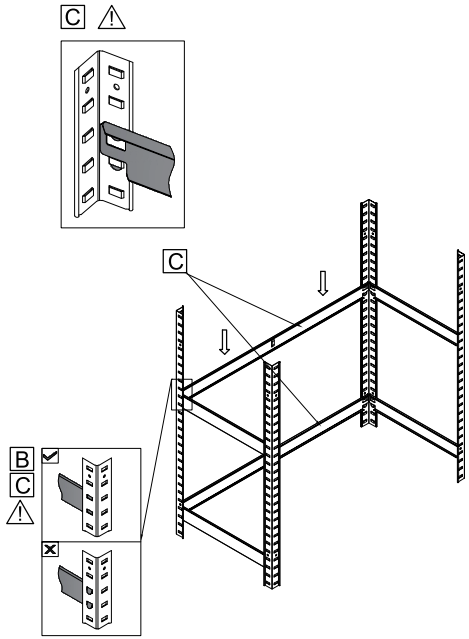

3

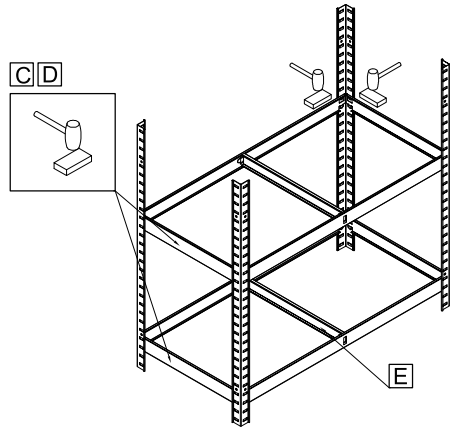

4

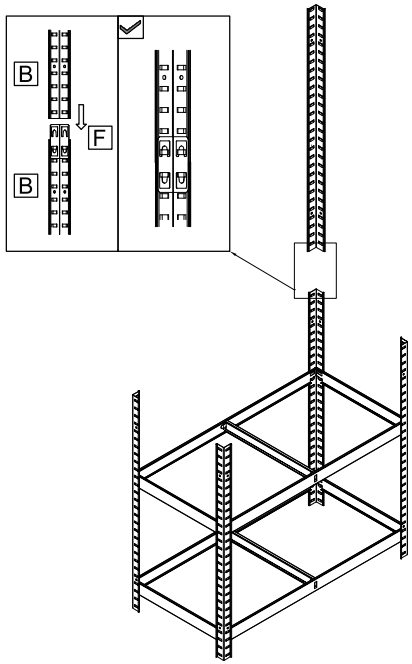

5

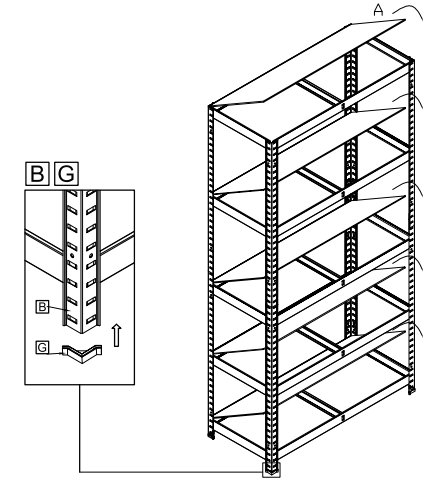

6

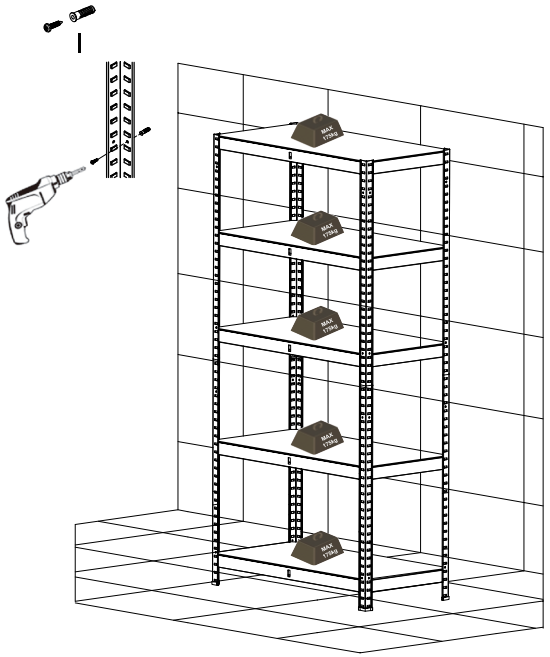

= max. 175kg

Thank You for Your Purchase!

Dear Valued Customer,

Thank you for supporting our small business! Your purchase means the world to us and helps us grow.

Reviews are the lifeline of a small business like ours and the only way to grow our business. We request you to kindly take a moment to leave an honest review of the product purchase on your chosen platform. Your feedback is essential for us to improve and reach more customers like you.

Should you have any queries regarding product installation or other concerns, please contact us [email: info@greenlanegear.co.za - WhatsApp: 0671676518]. We're here to assist you every step of the way.

Rest assured, we conduct thorough inspections to ensure all parts are included for installation. In the rare event of anything missing, please contact us directly using the provided contact information. Talking to us directly will expedite the solution, rather than contacting the online platform you purchased from, where we can experience delays.

For warranty purposes, kindly scan the QR code.

Thank you once again for choosing us.
We appreciate your trust and look forward to serving you again in the future!

Warm Regards,
Greenlane Gear

